REF. V2.4.0 05-09-24

FOX LUX
EMERGENCY LIGHTING

FXBX50-WK WALL MOUNT KIT (SINGLE SIDED)

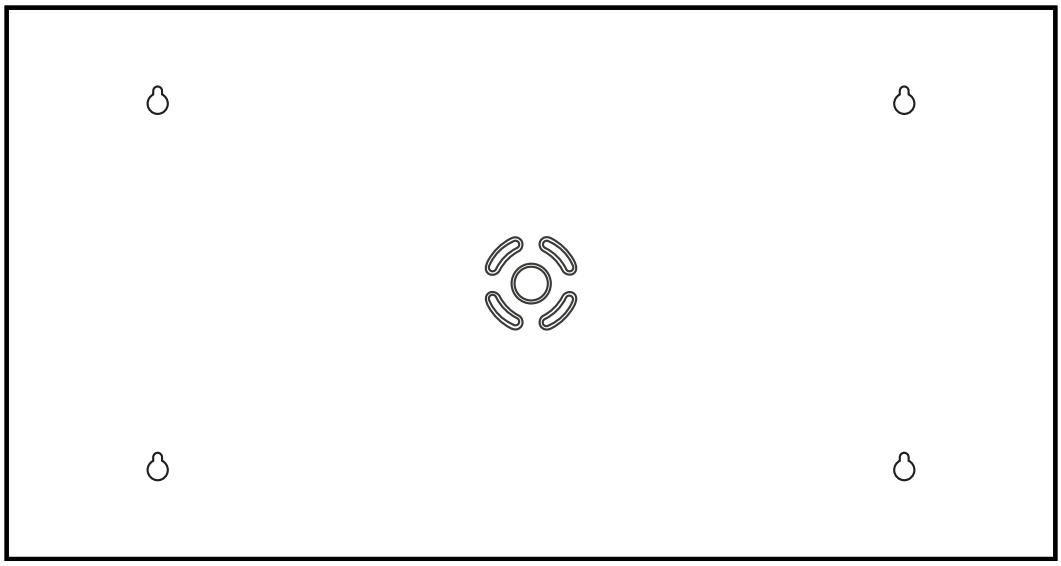

Technical Data

Model Variant	FXBX50-WK
Dimensions	510 x 220mm
Construction	Sheet steel
Mounting Options	BESA mount / Key holes
Keyhole Mounting Centres	430mm x 200mm

Use alongside the FXBX50S-3-M user guide to ensure correct installation.

hello@fox-lux.co.uk
www.fox-lux.co.uk
+44(0)1543 396400
Fox Lux Ltd., Unit 17 Britannia Way, Lichfield WS14 9UY

FOX LUX
EMERGENCY LIGHTING

FXBX50-WK WALL MOUNT KIT (SINGLE SIDED)

Installation Guide

1 Remove Product from Packaging

Remove back plate from packaging and have FXBX50S ready

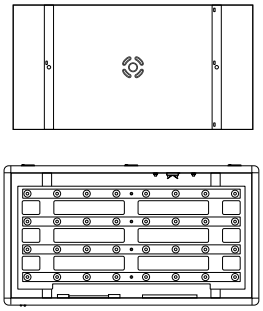

2 Remove Side Panel

Remove the side panel.

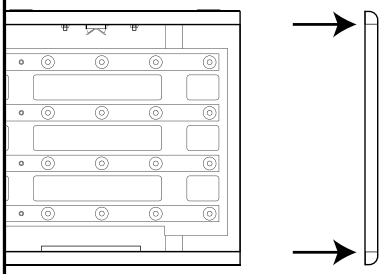

3 Insert Body Mount Panel

Slide the wall mount panel into the guides behind the LED board.

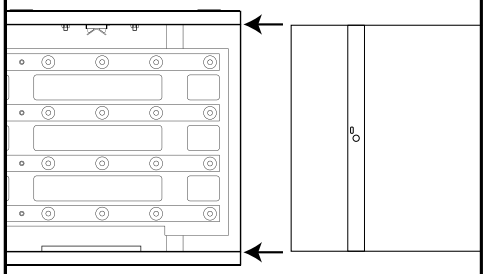

4 Remove LED Panel

Remove screws securing the LED board to reveal mounting holes.

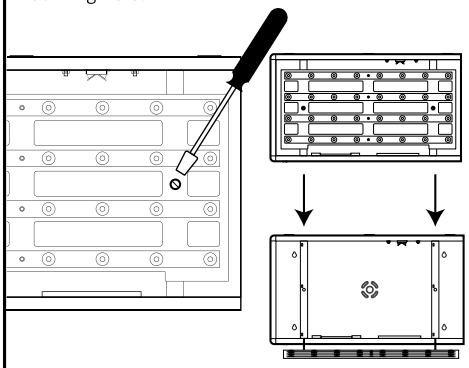

5 Install Body

Mark out and drill holes in mounting surface as indicated. Use appropriate hardware to mount the luminaire.

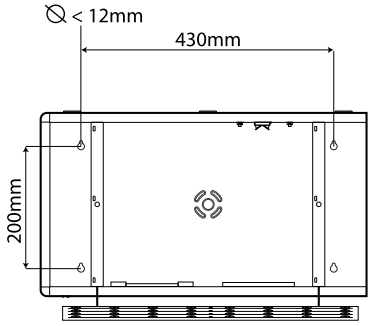

6 Reattach LED Panel

Install the LED panel back into the exit box and reattach using screws removed earlier.

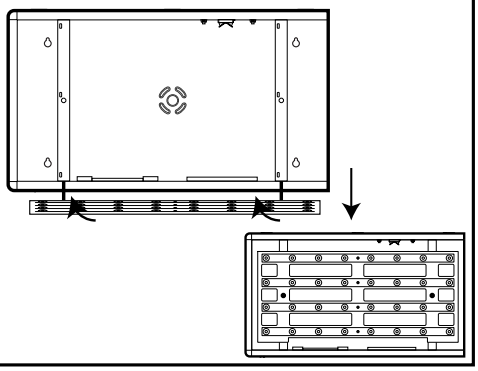

7 Refit Side Panel and Legend

Slide an appropriate legend in to the guides and refit the side panel.

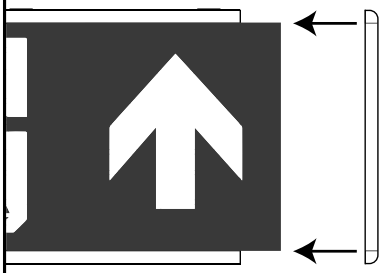

hello@fox-lux.co.uk
www.fox-lux.co.uk
+44(0)1543 396400
Fox Lux Ltd., Unit 17 Britannia Way, Lichfield WS14 9UY